TECHNOFORM



Creating complete solutions

Thermal edge bond solutions for insulating glass

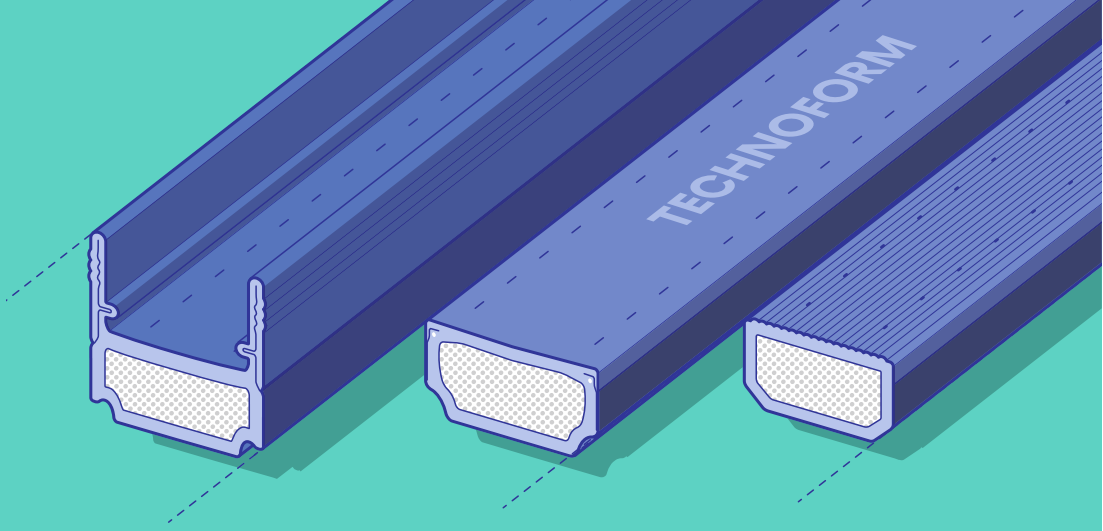

Hello, we are Technoform!

As a family company, we know that people empower every business. We firmly believe that the best ideas are always born together.

We are Technoform – 1,400 and growing, dedicated innovators that work for our customers worldwide. Understanding what drives customers and markets since 1969, we develop leading solutions collaboratively. Providing 100 % reliability and quality on all levels, we offer the same level of high-quality services and solutions all around the world. 45 sites in over 40 countries ensure continuous supply wherever you are.

Within Technoform, we focus on the development of thermally optimized edge bond solutions. We are driven by our daily challenge to find the best options for your individual purposes – and we are only satisfied when you are.

Performing 360° precision and 1,000+ skills, our highly trained team turns individual needs into tailored technological solutions. Delivering quantities from 1 to 1,000,000 meters, our customers can rely on receiving the best available package of quality, quantity by time, and price.

TGI-Spacer M – equipped for every challenge

The TGI-Spacer M was designed to meet the numerous requirements which apply to the modern glass edge seal. It is available in a range of variants specially matched to their individual intended use. While some of the details of the designs may differ from each other, they all provide low Psi values, high productivity, high process reliability and high-quality appearance.

You can benefit from the following advantages:

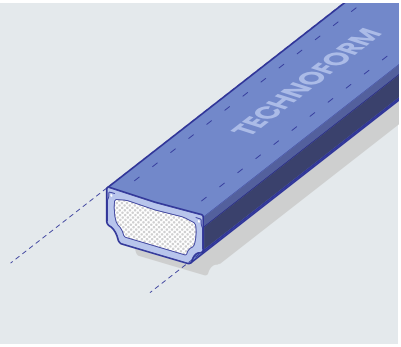

cold climate
phB
CERTIFIED COMPONENT
Passive House Institute

TGI-Spacer M with wire (ww)

- High profile stability due to patented steel wires
- Ideal for medium to large frames
- No readjustment of the frame
- Rigid corners

TGI-Spacer M without wire (nw)

- High level of design flexibility in any form
- Enables the bending of the smallest radii
- Allows negative bending (e.g. for continuous ventilation pipes)
- Certified Passive House Component Class B (Cold Climate)

TGI-Spacer M Bio – powered by nature

With our biobased polymer derived from plants we offer additional benefits by providing environmental certification, e.g. LEED or BREEAM, and a significant reduction of carbon dioxide and fossil energy consumption during the production process.

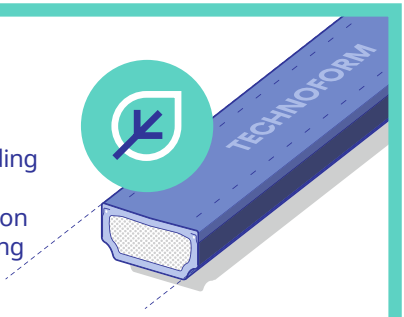

TGI-Spacer Precision – rely on perfection

Due to our innovative production process, Technoform can consistently guarantee the high quality of the edge bond. Our developments in thermal performance fit in perfectly with the trend towards nearly zero-energy houses. The optimum combination of materials in the TGI-Spacer Precision enables the lowest possible U values to be achieved in the system as a whole. As a result, fluctuations in thermal values are minimized, ensuring that designers and customers have a reliable basis for their calculations. Reliable process stability and insertion are ensured while a high-quality look completes the package.

You can benefit from the following advantages:

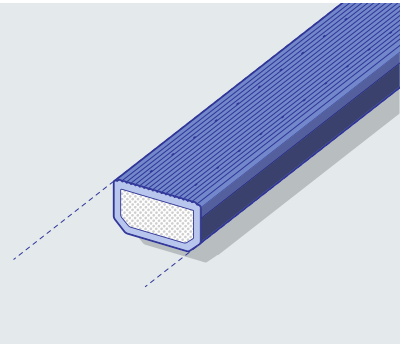

arctic climate
phA
CERTIFIED COMPONENT
Passive House Institute

TGI-Spacer Precision

- High quality of the glass edge seal and consistent Lambda-equivalent values due to lowest possible product tolerances
- Outstanding thermal performance
- Optimum process capability due to high fracture strength
- Suitable for large frames and triple-glazed units due to high profile stability
- Smooth and bright surface, similar like piano lacquer
- Perfect fitting connecting elements
- Certified Passive House Component Class A (Arctic Climate)

Leading to LEED Gold

University of Central Missouri, Warrensburg, USA, 2011, LEED Gold



TGI-Spacer Pellini – our internal blinds specialist

The TGI-Spacer Pellini is a spacer with integrated locating and guiding elements, specially designed for use with internal blinds while keeping Psi values low within the whole system.

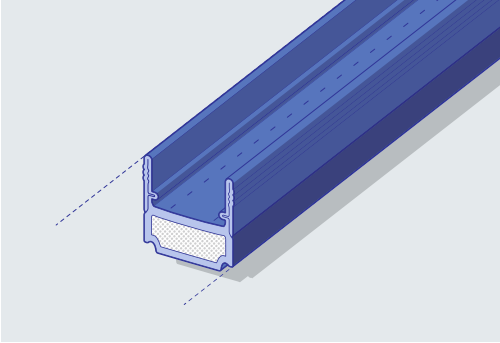

You can benefit from the following advantages:

- No noise or damage to the surface of the glass
- Low Psi values
- High-quality appearance

TGI-Muntin – less contact, more performance

Our “muntin” glazing bar system can be positioned within an insulating glass unit without any direct contact with the glass. It is aesthetically identical to the TGI-Spacer M, giving insulating glazing manufacturers a complete thermally optimized system that meets current thermal insulation requirements and will also meet the tighter requirements of tomorrow. Cross-shaped muntin bar connectors are used to connect profiles and are matched to the exact profile width in each case.

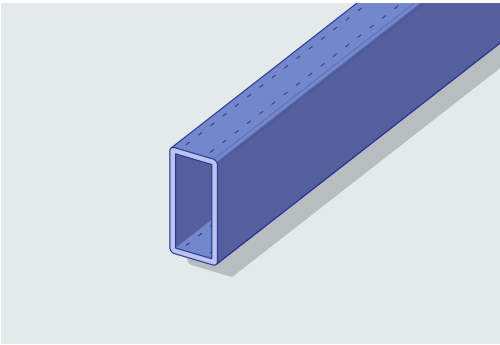

You can benefit from the following advantages:

- Low heat conductivity of just 0.25 W/mK
- Very high profile stability and low coefficient of linear expansion due to integrated glass fibres
- Perfect processability together with TGI-Spacer M

Thermal Values

A comparison of thermal values (according to Bundesverband Flachglas e.V.):

Wood Frame

	Aluminum Spacer		TGI-Spacer M		TGI-Spacer Precision	
Glazing	**2 IG**	**3 IG**	**2 IG**	**3 IG**	**2 IG**	**3 IG**
ψ value	0.074 W/mK	0.078 W/mK	0.040 W/mK	0.039 W/mK	0.031 W/mK	0.029 W/mK
U_w window	1.37 W/m²K	1.08 W/m²K	1.29 W/m²K	0.98 W/m²K	1.27 W/m²K	0.95 W/m²K
Temperature factor f_{Rsi}	0.50	0.57	0.62	0.70	0.66	0.74
Surface temp. T_{oi} at -10 °C, +20 °C	7.6	9.3	10.6	12.5	11.4	13.4

Plastic Frame

	Aluminum Spacer		TGI-Spacer M		TGI-Spacer Precision	
Glazing	**2 IG**	**3 IG**	**2 IG**	**3 IG**	**2 IG**	**3 IG**
ψ value	0.068 W/mK	0.069 W/mK	0.040 W/mK	0.038 W/mK	0.032 W/mK	0.030 W/mK
U_w window	1.30 W/m²K	1.00 W/m²K	1.23 W/m²K	0.92 W/m²K	1.21 W/m²K	0.90 W/m²K
Temperature factor f_{Rsi}	0.54	0.59	0.65	0.70	0.68	0.73
Surface temp. T_{oi} at -10 °C, +20 °C	8.6	9.8	11.3	12.9	12.0	13.3

Aluminum Frame

	Aluminum Spacer		TGI-Spacer M		TGI-Spacer Precision	
Glazing	**2 IG**	**3 IG**	**2 IG**	**3 IG**	**2 IG**	**3 IG**
ψ value	0.100 W/mK	0.100 W/mK	0.049 W/mK	0.044 W/mK	0.036 W/mK	0.031 W/mK
U_w window	1.52 W/m²K	1.26 W/m²K	1.39 W/m²K	1.12 W/m²K	1.36 W/m²K	1.09 W/m²K
Temperature factor f_{Rsi}	0.53	0.60	0.66	0.73	0.69	0.76
Surface temp. T_{oi} at -10 °C, +20 °C	8.3	10.1	11.5	13.3	12.4	14.1

Wood/Alu. Frame

	Aluminum Spacer		TGI-Spacer M		TGI-Spacer Precision	
Glazing	**2 IG**	**3 IG**	**2 IG**	**3 IG**	**2 IG**	**3 IG**
ψ value	0.084 W/mK	0.090 W/mK	0.044 W/mK	0.042 W/mK	0.032 W/mK	0.030 W/mK
U_w window	1.40 W/m²K	1.15 W/m²K	1.31 W/m²K	1.03 W/m²K	1.28 W/m²K	1.00 W/m²K
Temperature factor f_{Rsi}	0.45	0.53	0.59	0.59	0.63	0.71
Surface temp. T_{oi} at -10 °C, +20 °C	6.2	8.2	9.7	11.9	10.7	12.8

Colors and Sizes

Widths	TGI-Spacer M		TGI-Spacer Precision	TGI-Spacer Pellini
	nw	ww		
6.2 mm	•			
8 mm	•			
10 mm	•			
12 mm	•	•	•	
13 mm	•			
14 mm	•	•	•	
15 mm	•	•		
16 mm	•	•	•	•
18 mm	•	•	•	
20 mm	•	•	•	•
22 mm	•	•		•
24 mm	•	•		
26 mm	•			
30 mm		•		

TGI-Muntin	
Widths	Heights
21.5 mm	9.5 mm
25.5 mm	9.5 mm
31.5 mm	9.5 mm
21.5 mm	11.5 mm
25.5 mm	11.5 mm
31.5 mm	11.5 mm
21.5 mm	13.5 mm
31.5 mm	13.5 mm

Other colors, sizes and widths are available or can be produced according to customers' specification.

Similar to RAL 7035
Light grey

Similar to RAL 9005
Black

Similar to RAL 8003
Light brown

Similar to RAL 7040
Dark grey

Similar to RAL 9016
White

Similar to RAL 8016
Dark brown

$$U_w = \frac{U_f \cdot A_f + U_g \cdot A_g + \psi \cdot l_f}{A_w}$$

$$T_{oi} = T_{la} + f_{Rsi} \cdot (T_{li} - T_{la})$$

U_w = Thermal transmission coefficient, window
U_f = Thermal transmission coefficient, frame
U_g = Thermal transmission coefficient, glass
A_w = Window area
A_f = Frame area
A_g = Glass area

l_f = Length of edge, frame-glass
ψ = Linear thermal coefficient, composite edge
T_{oi} = Inner surface temperature
T_{li} = Indoor air temperature + 20 °C
T_{la} = Outdoor air temperature - 10 °C
f_{Rsi} = Temperature factor at R_{Rsi} = 0,20m² K/W

BR/01/TGI/TE-MEIA v1 08/2018

TECHNOFORM

Thermal edge bond solutions
for insulating glass

Middle East

T +971 4 321 5615
E info.middleeast@technoform.com

India

T +91 22 25708465
E info.india@technoform.com

Africa

T +971 4 321 5615
E info.africa@technoform.com

www.technoform.com